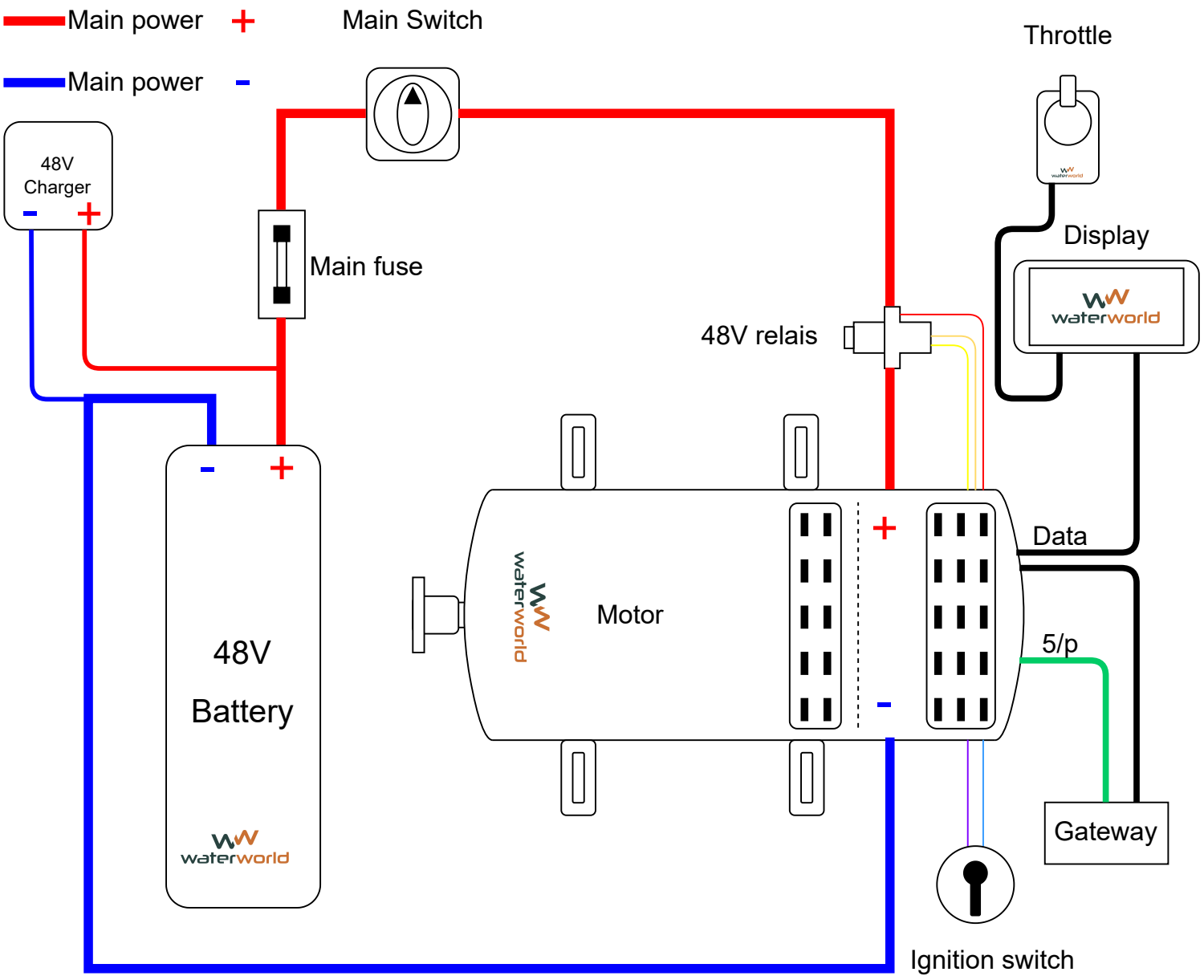
Main power +
Main power -
Main Switch
Throttle
48V Charger
- +
Main fuse
Display
waterworld
48V relais
- +
48V Battery
waterworld
Motor
waterworld
+
-
Data
5/p
Gateway
Ignition switch